Baby B Mk 2 An 8" span competition HLG

Designed by Stephen Brewer July 2004

All dimensions are in inches

Wood Sizes

Wing 1/8" sheet
Tailplane 1/32" sheet
Fin 1/32" sheet
Fuselage 1/8" sheet

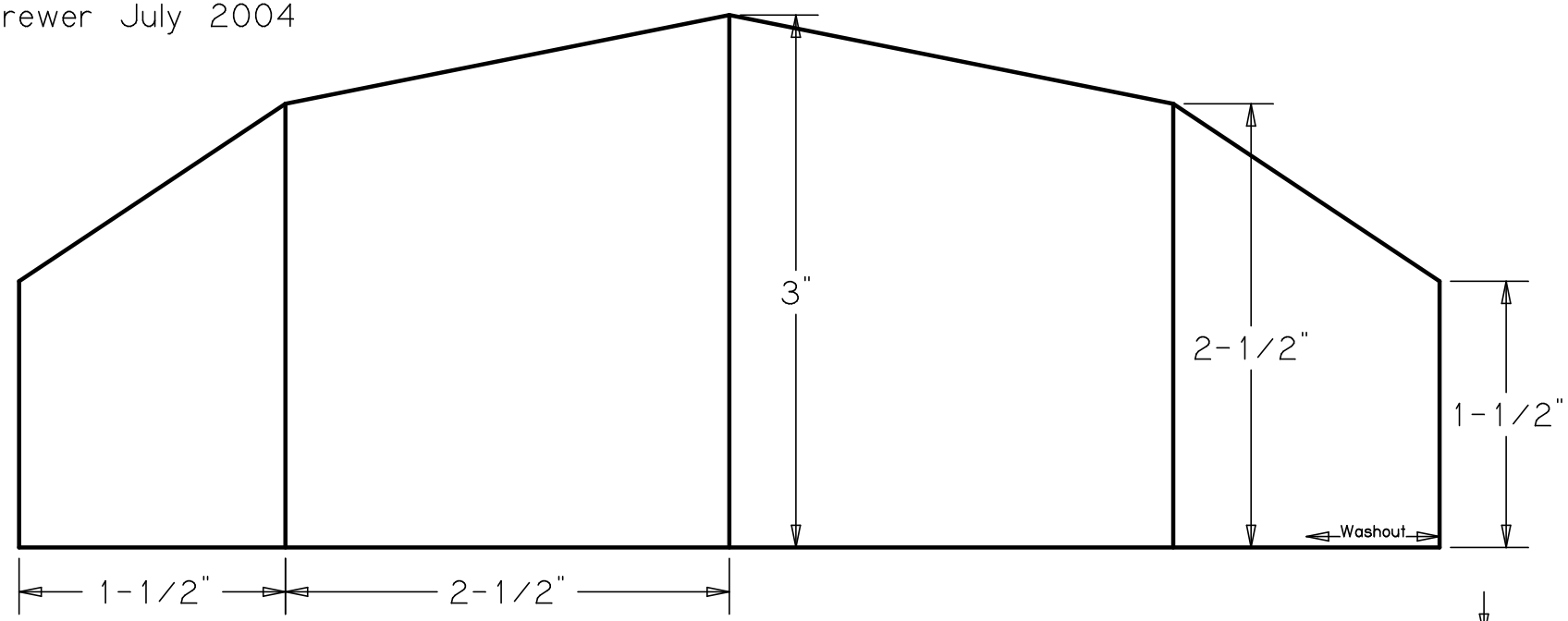

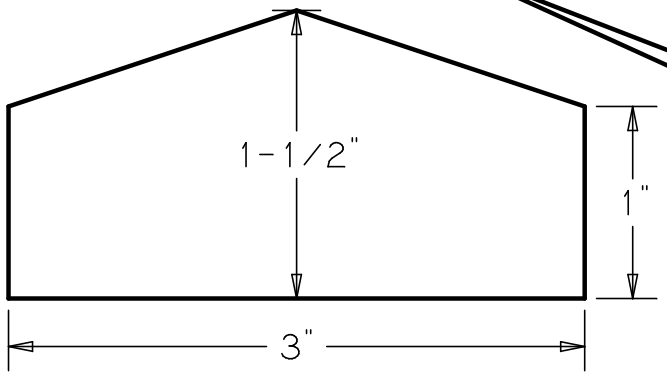

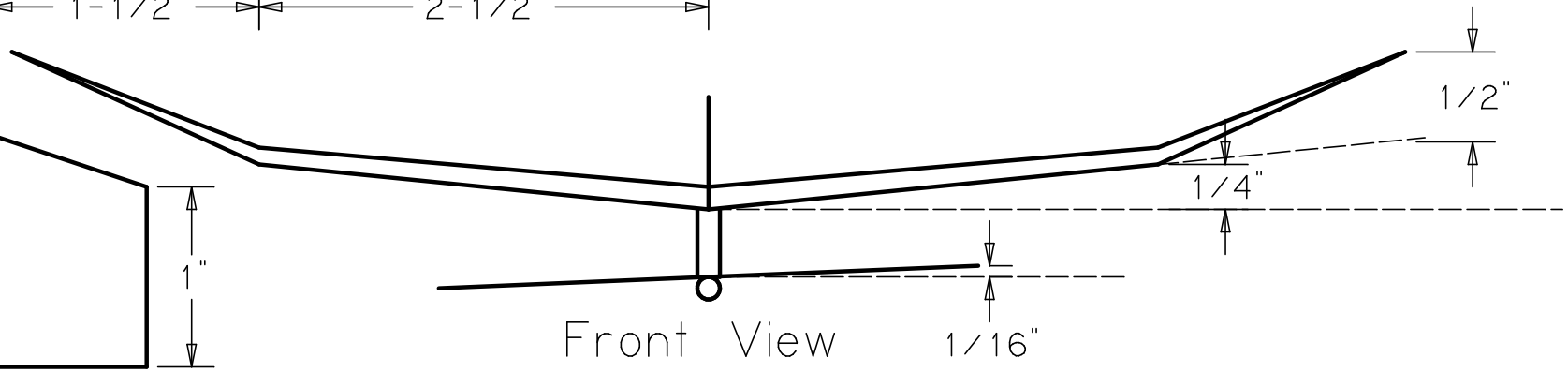

Front View

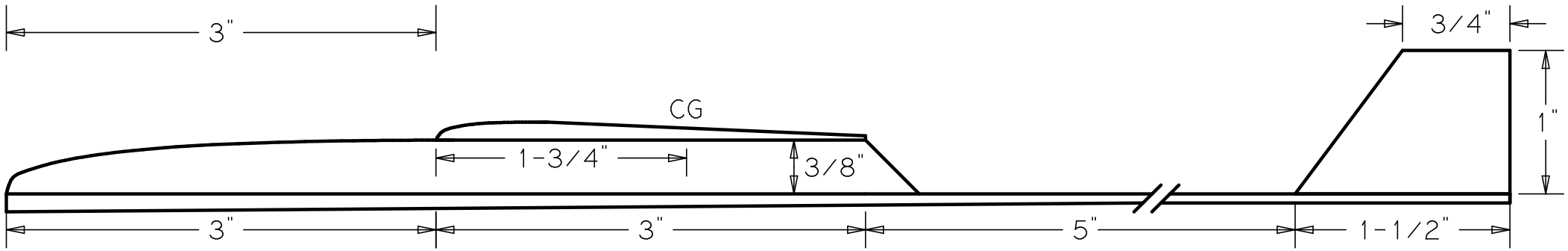

Carbon/Fibreglass boom (total length 12 1/2")